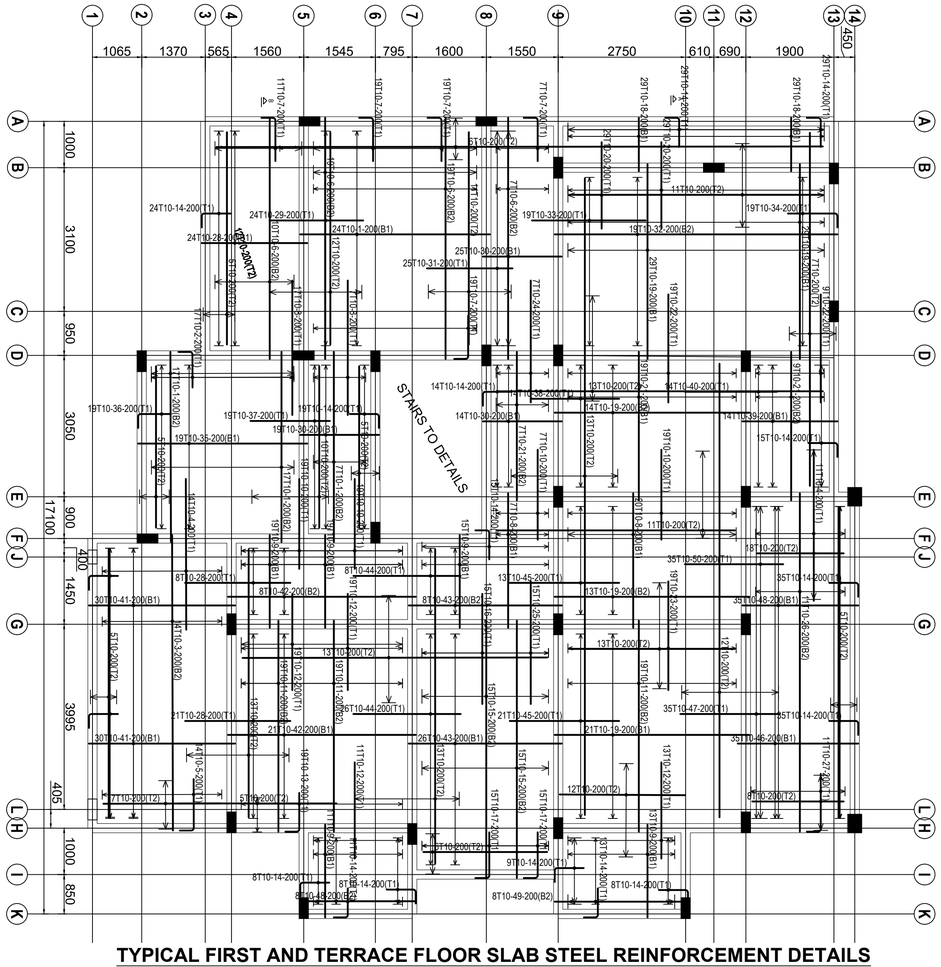

TYPICAL FIRST AND TERRACE FLOOR SLAB STEEL REINFORCEMENT DETAILS
SCALE: 1/50

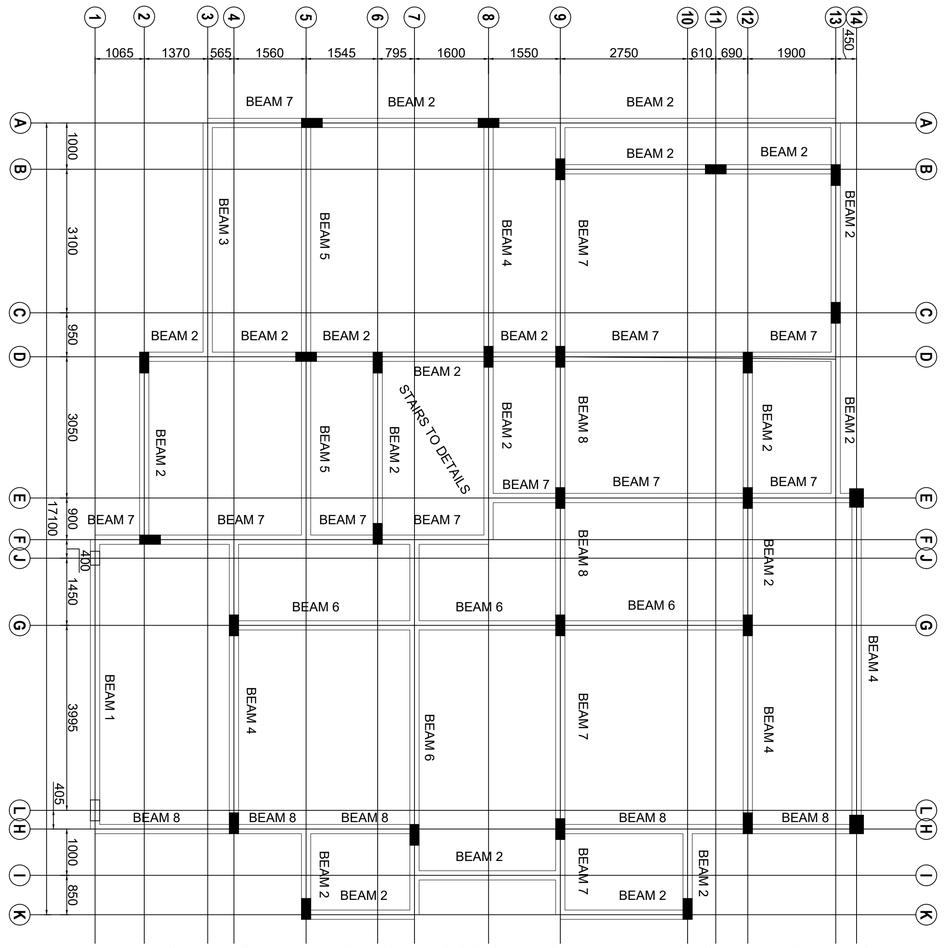

TYPICAL FIRST AND TERRACE FLOOR SLAB STEEL REINFORCEMENT DETAILS
SCALE: 1/50

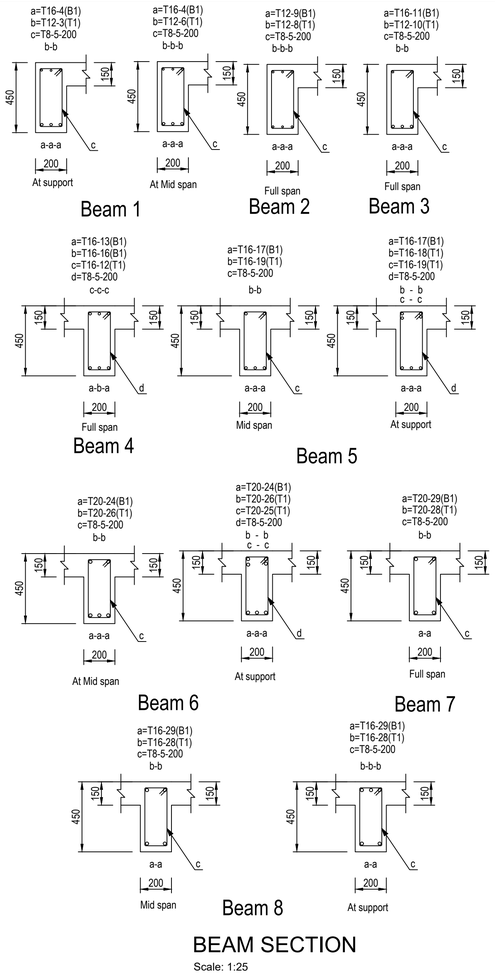

BEAM SECTION
Scale: 1:25

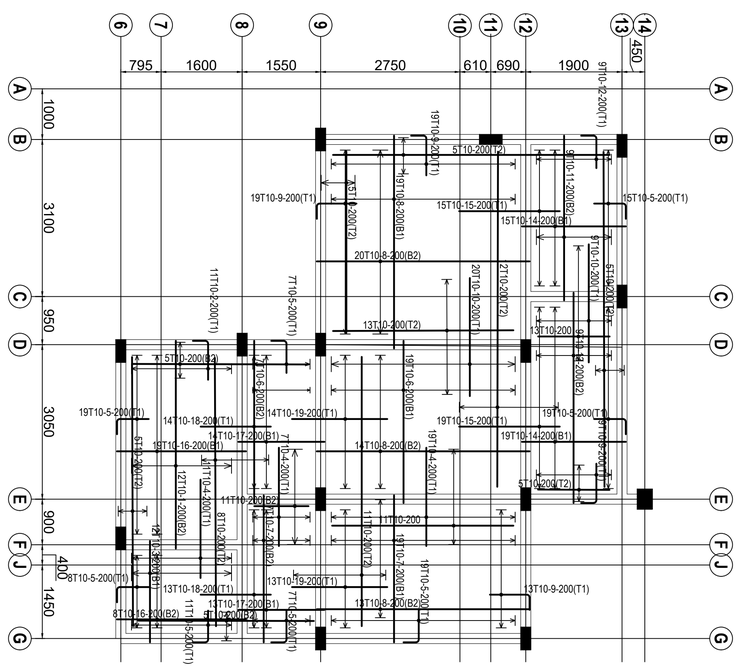

TYPICAL TERRACE ROOF SLAB STEEL REINFORCEMENT DETAILS
SCALE: 1/50

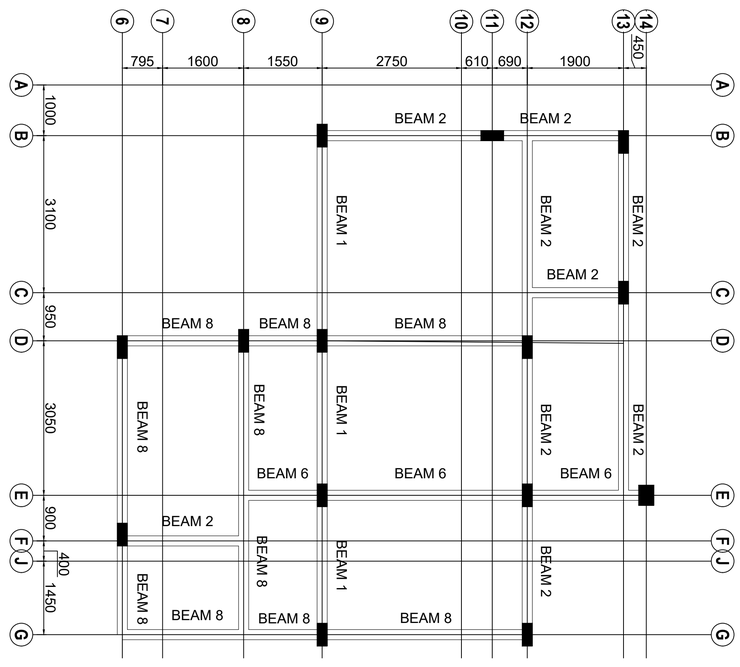

TYPICAL TERRACE ROOF SLAB STEEL REINFORCEMENT DETAILS
SCALE: 1/50

Project

PROPOSED RESIDENTIAL DEVELOPMENT ON PLOT

.....

Client

CLIVE SAFARI
P.O BOX .....
.....

Drg title *Structural drawing Slab and beams*

VERIFIED & CHECKED BY; *T.T.K*		*dr no.* *CS/02/2025*	*Sheet no.* *02/02*
Date ***JAN 2025***	*drn* *A.B*	*Client signature.....*	
Paper size *A1*	*Scale* *As shown*		